PDF pdfFactory Pro
www.fineprint.cn

EasyDriver v4.4

www.schmalzhaus.com/EasyDriver

An easy to use bipolar stepper motor driver
Use 4 wire, 6 wire or 8 wire steper motors
From about 150mA/phase to about 750mA/phase
Defaults to 5V for Vcc (logic supply), settable to 3.3V
Supply 8V to 30V DC power input on JP1
Do not connect or disconnect motor
whlie EasyDriver is powered

DEFAULT OPTIONS
Short JP5, JP6, JP7 pins
to GND or Vcc to override

SLEEP = Vcc (awake)
MS1 = Vcc (1/8 microstep)
MS2 = Vcc (1/8 microstep)
ENABLE = GND (enabled)
RESET = Vcc (not reset)
PFD = Vcc (slow decay mode)

DIR is level sensitive
A rising edge on STEP
causes a step
Both take 0V to Vcc

Coil 1 of motor across
OUT1B and OUT1A
Coil 2 of motor across
OUT2B and OUT2A

TP1 - VREF input to driver
Monitor this test point with meter
as you adjust current adj pot
Valid range 1.0V to Vcc
At VREF of 5V max current will be 833mA
At VREF of 3.3V max current will be 550mA
At VREF of 1V max current will be 166mA
Minimum current gives smoothest microsteps
Maximum current gives highest torque

PFD intermediate voltage
Change R12 and add in
R17 to create any voltage
on PFD for best high
speed performance.
See datasheet

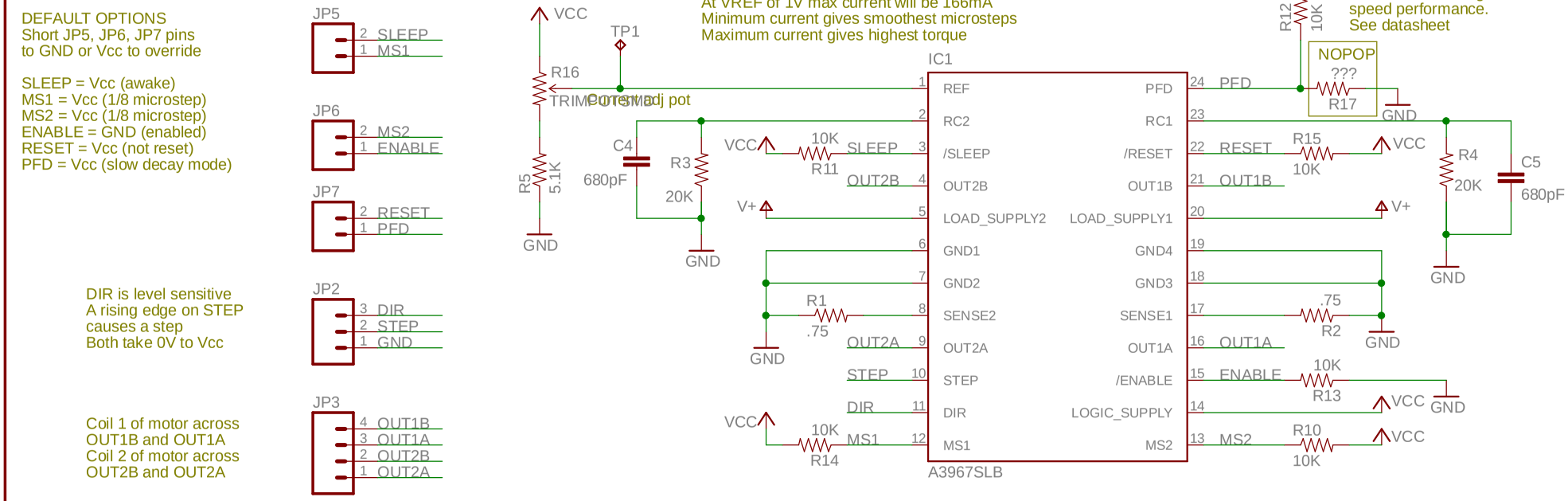

Power Input
8V to 30V (Vcc = 5V)
6.3V to 30V (Vcc = 3.3V)

Must use LM317
For 30V V+ input

SJ1 Normally Shorted
Cut to use your own
Vcc source from JP4

Vcc output
Max 70mA used by EasyDriver
The rest you can use

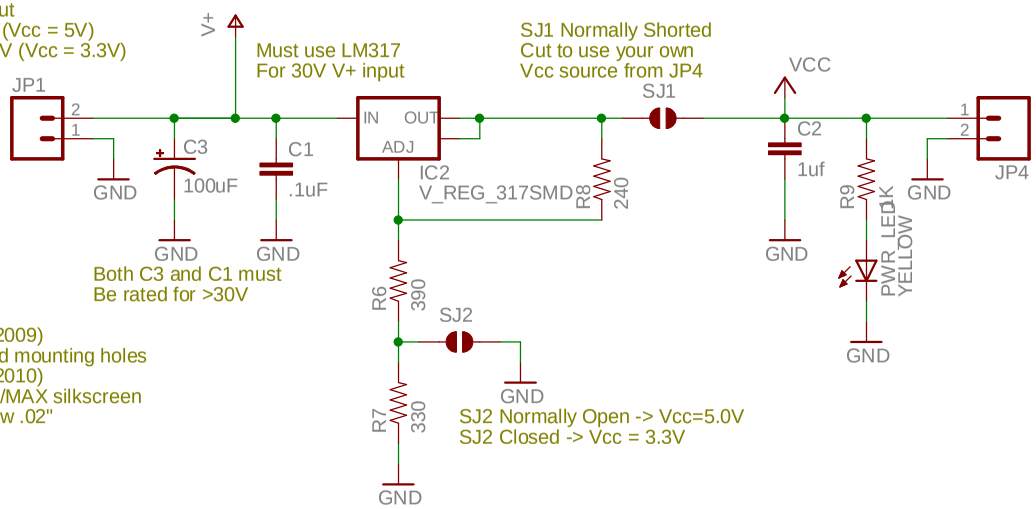

Both C3 and C1 must
Be rated for >30V

SJ2 Normally Open -> Vcc=5.0V
SJ2 Closed -> Vcc = 3.3V

Change List:
v4.3 (12/09/2009)
v4.3 Added mounting holes
v4.4 (10/24/2010)
Fixed MIN/MAX silkscreen
All vias now .02"

EasyDriver by Brian Schmalz is
licensed under a Creative Commons
Attribution 3.0 US License

Designed by Brian Schmalz

Produce by Spark Fun Electronics

TITLE: EasyDriver_v44

Document Number:

REV:

Date: 2011/9/16 11:27:40

Sheet: 1/1