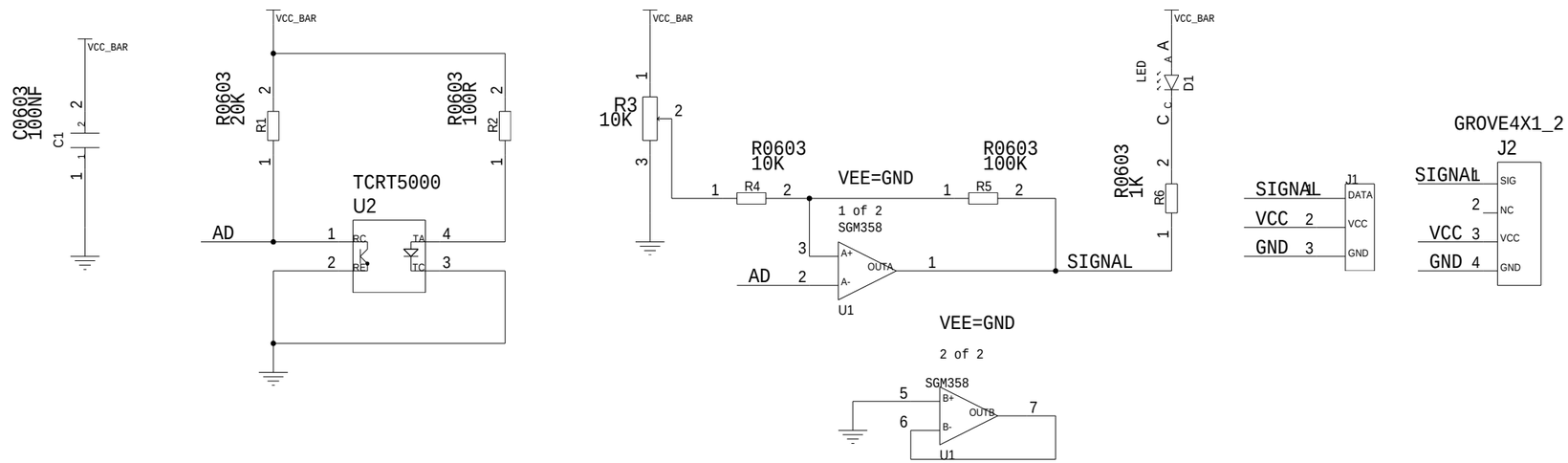

TITLE: PATROL LINE SENSOR	DATE: 2012/9/26
ENGINEER: ZHENQIANG LEE	PAGE: 1